Quip

PRODUCT CATALOGUE

Contents

Shelf Sizing by Van Model 4

Service Body/Ute Shelving 6

Small Van Shelving 6

Mid Van Shelving 7

Large Van Shelving 9

Work Benches 11

Folding Shelving 11

Accessories 12

Drawer Units 14

Floors 17

Mid Van Shelf Packages 18

Guide to Fitting Out Your Vehicle

1 Select your products as below:

- Shelving
  - Identify your van model from the chart on page 4-5
  - Select your shelving combination
- Accessories
  - Select your accessories
- Drawer Units
  - Identify your van model from the chart on page 14-15
  - Select your drawer unit
- Shelf Packages
  - See our range of Shelf Packages on page 18-25

2 Chose your installation option - flat pack or fully installed by our experienced fitters

3 Get in touch with our team to request a quotation

If you require a complete or custom fitout please give us a call on our free call number - 1800 847 687

Shelf Sizing by Van Model

							Full Length Options			
Vehicle Make	**Model**	**Type**	**Van Size**	**QTY Shelves**	**FRONT HALF ONLY**	**REAR HALF ONLY**	**FRONT**	**MIDDLE**	**REAR**	**SINGLE UNIT**
Citroen	Berlingo	Standard	Small	3	870	870				1220
		MAXI	Small	3	870, 1040	870, 1040				1600
Fiat	Doblo	Standard	Small	3	870	870				1220
		MAXI	Small	3	870, 1040	870, 1040				1600
	Ducato	SWB Low Roof	Large - Low Roof	5	870	1040, 1220	870		1220	
		MWB Low or Mid Roof	Large - Low Roof	5	1220, 1600	1220, 1600	1220		1600	Combination can be swapped
		LWB Mid Roof	Large - Low Roof	5	1220, 1600	1220, 1600	1220		1600	Combination can be swapped
		XLWB Mid Roof	Large - Low Roof	5	1220, 1600	1600	870	870	1600	
Ford	Transit	Custom SWB	Mid	4	1040	1040	1040		1040	
		Custom LWB	Mid	4	1040, 1220	1040, 1220	1220		1220	
		LWB Mid Roof	Large - Low Roof	5	1220, 1600	1220, 1600	1600		1220	Combination can be swapped
		LWB High Roof	Large - Low Roof	5	1220, 1600	1220, 1600	1600		1600	
		XLWB JUMBO HIGH ROOF DUAL WHEELS	Large - High Roof	5	1220, 1600	1600	870	870	1600	
		XLWB Jumbo High Roof SINGLE WHEEL	Large - High Roof	5	1220, 1600	1600	870	870	1600	
Hyundai	iLoad		Mid	4	870, 1040, 1220	1040, 1220	870		1040	1900
Iveco	Daily	7.3m3	Large - Low Roof	5	1040, 1220	1040, 1220	1220		1040	
		9m3	Large - Low Roof	5	1220, 1600	1220, 1600	870	870	1220	
		10.8m3	Large - Low Roof	5	1040, 1220	1040, 1220	1220		1040	
		12m3	Large - Low Roof	5	1220, 1600	1220, 1600	1600		1600	
		16m3	Large - Low Roof	5	1220, 1600	1040, 1220	1040, 1220	1220, 1040	1220	Front & Mid can be swapped
		18m3	Large - High Roof	5	1220, 1600	1040, 1220	1040, 1220	1220, 1040	1220	Front & Mid can be swapped
		20m3	Large - High Roof	5	1220, 1600	1220, 1600	1220	870 & 1040	1600	Mid can be swapped
LDV	G10		Mid	4	870	1040	870		1040	
	V80		Large - Low Roof	5	1220, 1600	1220, 1600	1040		1600	

							Full Length Options			
Vehicle Make	**Model**	**Type**	**Van Size**	**QTY Shelves**	**FRONT HALF ONLY**	**REAR HALF ONLY**	**FRONT**	**MIDDLE**	**REAR**	**SINGLE UNIT**
Mercedes	Sprinter	SWB Low Roof	Large - Low Roof	5	1220, 1600	1040, 1220, 1600	1220		1600	
		MWB Low Roof	Large - Low Roof	5	1220, 1600	1220, 1600	1600		1220	Combination can be swapped
		MWB High Roof	Large - High Roof	5	1220, 1600	1220, 1600	1600		1220	Combination can be swapped
		LWB High Roof	Large - High Roof	5	1220, 1600	1600	1040	1220	1600	Front & Mid can be swapped
		LWB Super High Roof	Large - High Roof	5	1220, 1600	1600	1040	1220	1600	Front & Mid can be swapped
		XLWB High Roof	Large - High Roof	5	1220, 1600	1040	1600	1600	1040	
		XLWB Super High Roof	Large - High Roof	5	1040, 1220, 1600	1040	1600	1600	1040	
	Vito	SWB Mid High Roof	Mid	4	1040	870				1900
		LWB Mid Low Roof	Mid	4	1040, 1220	1040, 1220	1040		1220	
		Crew Van	Mid	4		1040				
Renault	Kangoo	SWB	Small	3	870	870				1220
		Maxi	Small	3	870, 1040	870, 1040				1600
	Master	SWB L1 H1	Large - Low Roof	5	1220	1040, 1220, 1600	1220		1600	
		MWB L2 H2	Large - Low Roof	5	1220, 1600	1040, 1220	1600		1040	Combination can be swapped
		LWB L3 H2	Large - Low Roof	5	1220, 1600	1040, 1220, 1600	1600		1600	
		ELWB L4 H3	Large - High Roof	5	1220, 1600	1040, 1220, 1600	1040	1040	1600	
	Traffic	SWB	Mid	4	870, 1040	1040	870		1040	
		LWB	Mid	4	1040, 1220	1040, 1220	1040		1220	Combination can be swapped
		LWB Crewvan	Mid	4		1220				
Toyota	Hiace	LWB	Mid	4	870, 1040, 1220	1040, 1220	1220		1040	Combination can be swapped
		SLWB	Large - Low Roof	4	1220, 1600	1220, 1600	1220		1600	Combination can be swapped
Volkswagen	Caddy	Standard	Small	3	870	870				1220
		Maxi	Small	3	870, 1040	870, 1040				1600
	Crafter	MWB Low Roof	Large - Low Roof	5	1040, 1220, 1600	1040, 1220	1600		1220	Combination can be swapped
		LWB High Roof	Large - High Roof	5	1040, 1220, 1600	1600	1600		1600	
	Transporter (T6)	SWB Standard Roof	Mid	4	870	1040	870		1040	1900
		SWB Medium Roof	Mid	4	870	1040	870		1040	1900
		LWB Standard Roof	Mid	4	870, 1040, 1220	1040, 1220	1220		1040	
		LWB Medium Roof	Mid	4	870, 1040, 1221	1040, 1221	1220		1040	
		LWB High Roof	Large - Low Roof	5	870, 1040, 1221	1040, 1221	1220		1040	

Service Body Shelving

Service Body/Ute Shelf Unit

780mm high
Top Shelf - 295mm deep
Bottom Shelf - 405mm deep

Code	Description
SBS870	870mm wide
SBS1040	1040mm wide
SBS1220	1220mm wide

Small Van Shelving

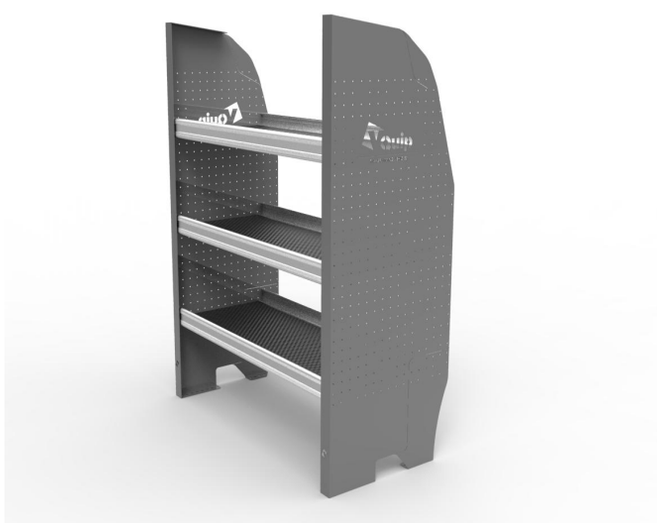

3 Shelf Unit Plain

1200mm high
Top Shelf - 295mm deep
Bottom 2 Shelves - 375mm deep

Code	Description
SVS870	870mm wide
SVS1040	1040mm wide
SVS1220	1220mm wide
SVS1600	1600mm wide

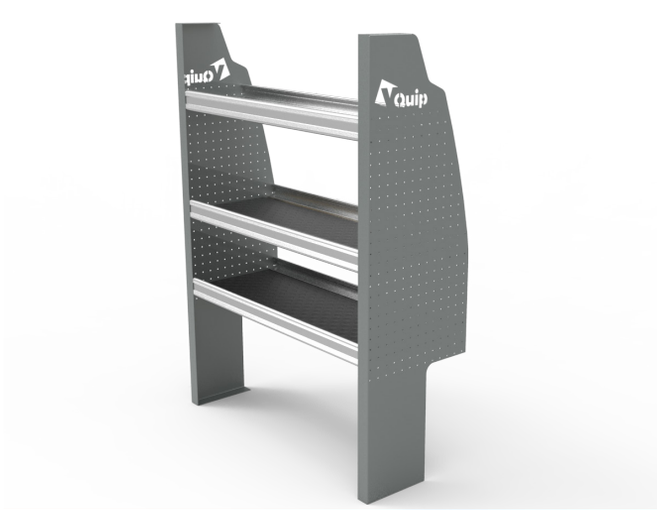

3 Shelf Slimline Unit Plain

1200mm high
Top Shelf - 185mm deep
Bottom 2 Shelves - 295mm deep

Code	Description
SVS870.S	870mm wide
SVS1040.S	1040mm wide
SVS1220.S	1220mm wide
SVS1600.S	1600mm wide

Mid Van Shelving

4 Shelf Unit Plain

1280mm high
Top 2 Shelves - 295mm deep
Bottom 2 Shelves - 405mm deep

Code	Description
MVSP870	870mm wide
MVSP1040	1040mm wide
MVSP1220	1220mm wide
MVSP1900	1900mm wide

4 Shelf Slimline Unit Plain

1280mm high
Top 2 Shelves - 185mm deep
3rd Shelf - 215mm deep
Bottom Shelf - 245mm deep

Code	Description
MVSP870.S	870mm wide
MVSP1040.S	1040mm wide
MVSP1220.S	1220mm wide
MVSP1900.S	1900mm wide

3 Shelf Unit with 270mm & 405mm High Lockable Door Fronts

1280mm high
Top Shelf - 295mm deep
Bottom 2 Shelves - 405mm deep

Code	Description
MVSPD870.24	870mm wide
MVSPD1040.24	1040mm wide
MVSPD1220.24	1220mm wide

*Cannot be fitted over wheel arch

Mid Van Shelving

4 Shelf Unit with 270mm High Lockable Door Front

1280mm high
Top 2 Shelves - 295mm deep
Bottom 2 Shelves - 405mm deep

Code	Description
MVSPD870.2	870mm wide
MVSPD1040.2	1040mm wide
MVSPD1220.2	1220mm wide

3 Shelf Unit with 405mm High Lockable Door Front

1280mm high
Top Shelf - 295mm deep
Bottom 2 Shelves - 405mm deep

Code	Description
MVSPD870.4	870mm wide
MVSPD1040.4	1040mm wide
MVSPD1220.4	1220mm wide

4 Shelf Slimline Unit with 270mm High Lockable Door Front

1280mm high
Top 2 Shelves - 185mm deep
3rd Shelf - 215mm deep
Bottom Shelf - 245mm deep

Code	Description
MVSPD870.S2	870mm wide
MVSPD1040.S2	1040mm wide
MVSPD1220.S2	1220mm wide

Mid Van Shelving

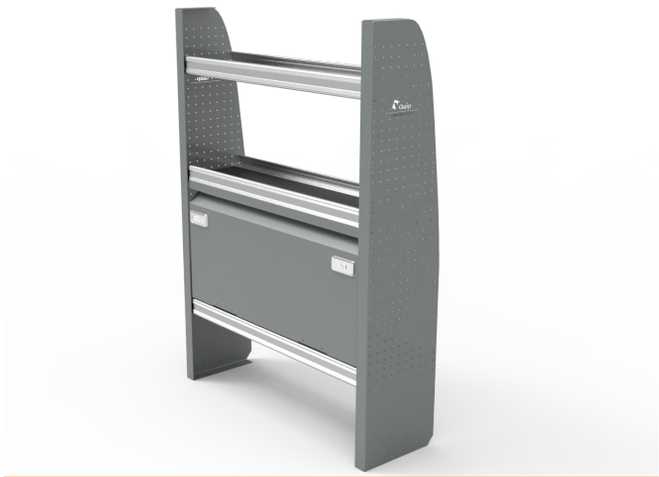

3 Shelf Slimline Unit with 405mm High Lockable Door Front

1280mm high
Top Shelf - 185mm deep
3rd Shelf - 215mm deep
Bottom Shelf - 245mm deep

Code	Description
MVSPD870.S4	870mm wide
MVSPD1040.S4	1040mm wide
MVSPD1220.S4	1220mm wide

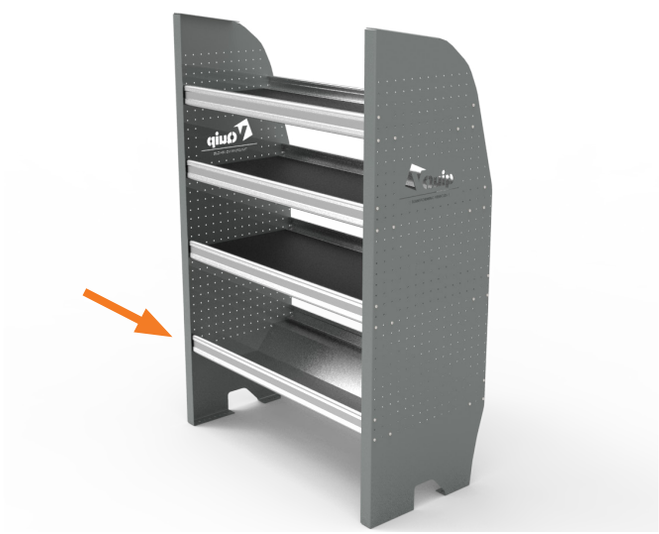

4 Shelf Unit with Cable Tray

1280mm high
Top 2 Shelves - 295mm deep
3rd Shelf - 405mm deep
Cable tray - 405mm deep

Code	Description
MVSC870	870mm wide
MVSC1040	1040mm wide
MVSC1220	1220mm wide

Large Van High Roof Shelving

5 Shelf Unit Plain - High Roof

1860mm high
Top Shelf - 295mm deep
Middle 2 Shelves - 375mm deep
Bottom 2 Shelves - 405mm deep

Code	Description
LVS870.H	870mm wide
LVS1040.H	1040mm wide
LVS1220.H	1220mm wide
LVS1600.H	1600mm wide

Large Van Standard Roof Shelving

5 Shelf Unit Plain

1520mm high
Top 2 Shelves - 295mm deep
Bottom 3 Shelves - 405mm deep

Code	Description
LVS870.L	870mm wide
LVS1040.L	1040mm wide
LVS1220.L	1220mm wide
LVS1600.L	1600mm wide

5 Shelf Unit Slimline

1520mm high
Top 2 Shelves - 185mm deep
Bottom 3 Shelves - 215mm deep

Code	Description
LVS870.LS	870mm wide
LVS1040.LS	1040mm wide
LVS1220.LS	1220mm wide
LVS1600.LS	1600mm wide

5 Shelf Unit Plain

1520mm high
5 Shelves - 380mm deep

Code	Description
LVS1040.LSQ	1040mm wide
LVS1220.LSQ	1220mm wide
LVS1600.LSQ	1600mm wide

Work Benches

Work Bench - Standard Width

880mm high
Bench top - 600mm deep
Includes 32mm thick Postform Grey Laminate Bench Top

Code	Description *
WB1040	1040mm wide
WB1220	1220mm wide
WB1600	1600mm wide

Work Bench - Slimline

760mm high
Bench top - 450mm deep
Includes 32mm thick Postform Grey Laminate Bench Top

Code	Description *
WB1040.S	1040mm wide
WB1220.S	1220mm wide
WB1600.S	1600mm wide

Folding Shelving

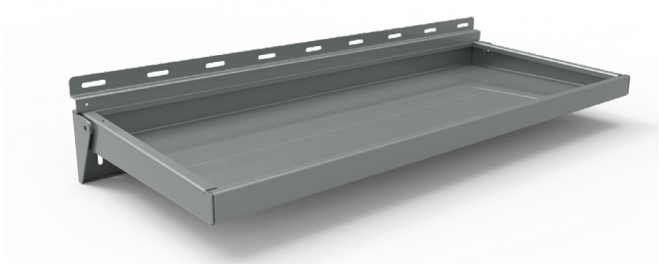

Folding Shelf

Shelf Depth - 500mm

Code	Description *
FS1200	1200mm wide

***Custom lengths are available subject to vehicle specification. Please contact VQuip on 1800 847 687 for a quote.**

Van Accessories

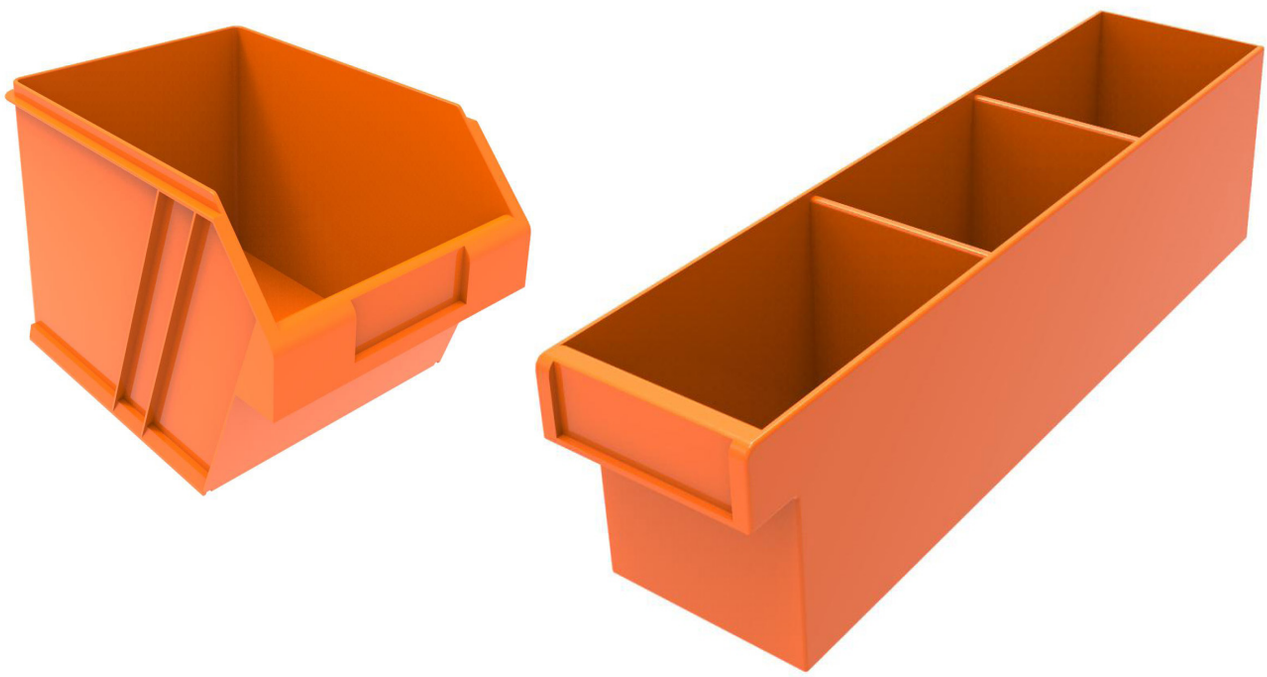

Parts Bins

Code	Description
515001	Fischer Stor-Pak 10 Bin - 170D x 100W x 85H
515002	Fischer Stor-Pak 25 Bin - 220D x 133W x 125H
515006	Fischer Stor-Pak 60 Bin - 275D x 200W x 165H
515012	Fischer Stor-Pak 120 Bin - 275D x 410W x 165H
515024	Fischer Stor-Pak 240 Bin - 440D x 410W x 210H
515130	Fischer Small Spare Parts Tray - 300D x 100W x 100H
515140	Fischer Medium Spare Parts Tray - 400D x 100W x 100H
515230	Fischer Intermediate Spare Parts Tray - 300D x 200W x 100H
515240	Fischer Large Spare Parts Tray - 400D x 200W x 100H

Gas Bottle Box

Code	Description
511000.C	450H x 400W x 300D
511003.C	770H x 400W x 300D

*Compliant with relevant national standards and regulations

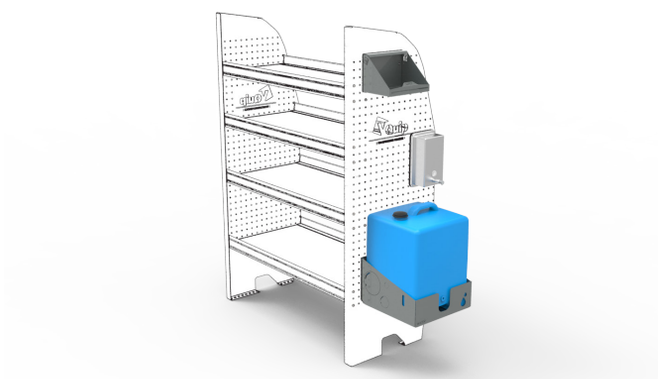

Hand Washing Accessories

Code	Description
214006.C	10L Water Tank with Holder
242026.C	25L Water Tank with Holder
242005.C	Soap Dispenser (500ml)
242007.C	Paper Towel Holder

* 25L Water Tank (with Holder), Soap Dispenser & Paper Towel Holder pictured.

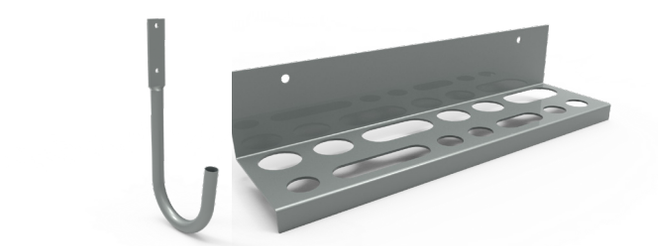

Storage Accessories

Code	Description
514002.LC	Lead Hook
514017.C	Tool Holder

Safety Accessories

Code	Description
514020.C	Basic First Aid Kit with Holder
473103.WM	Fire Extinguisher 1.5kg - with Hose & Mounting Bracket

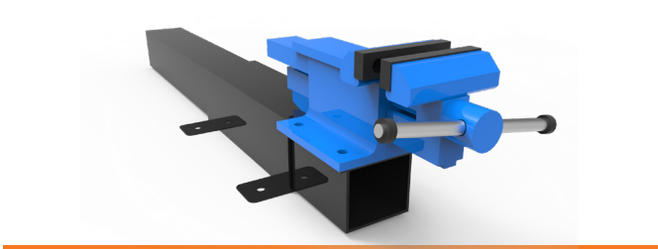

Vice with Mount

Code	Description
VSFM.C	Vice Slide - Floor Mount
475016	100mm Vice - Non Swivel

Drawer Units by Van Model

Vehicle Make	Model	Type	Code	Single Side Drawer	Code	Twin Side Drawers	Code	Twin Rear Drawers
Citroen	Berlingo	Standard	491181	1200L x 500W x 295H			493181	1000L x 1150W x 295H plus Wing Kit
		MAXI	491182	1200L x 500W x 295H			493182	1300L x 1150W x 295H plus Wing Kit
Fiat	Doblo	Standard	491093	1200L x 500W x 295H			491093	1000L x 1180W x 295H plus wing Kit
		MAXI	491094	1200L x500W x 295H			491094	1300L x 1180W x 295H plus wing Kit
	Ducato	SWB			492091.1	1400L x 980W x 295H	493091.1	1500L x 1180W x 295W plus Wing Kit
		MWB			492091	1400L x 1150W x 295H	493091.2	1850L x 1180W x 295H plus Wing Kit
		LWB			492091	1400L x 1150W x 295H	493091.3	2350L x 1180W x 295H plus Wing Kit
		XLWB					493091	2350L x 1400W x 295H plus Wing Kit
Ford	Transit	Custom SWB			492065	1600L x 1000W x 295	493065.1	1450L x 1180W x 295H plus Wing Kit
		Custom LWB					493065	1700L x 1180W x 295 plus Wing Kit
		LWB			492061.3	1600L x 1000W x 295	493061.3	1700L x 1180W x 295 plus Wing Kit
		XLWB Jumbo Dual Wheels			492061.4	1600L x 1180W x 295	492061.4	2350L x 1180W x 295H plus Wing Kit
		XLWB Jumbo Single Wheels			492061.4	1600L x 1180W x 295	492061.4	2350L x 1050W x 295H plus Wing Kit
Hyundai	iLoad		491011	1480L x 730W x 295H			493011	1540L x 1180W x 290H plus Wing Kit
Iveco	Daily	7.3m3			492121.1	1400L x 1000W x 295	493121.1	1500L x 1180W x 295H plus Wing Kit
		9m3			492121.11	1400L x 1000W x 295	493121.11	1800L x 1180W x 295H plus Wing Kit
		10.8m3			492121.2	1400L x 1000W x 295	493121.2	1500L x 1180W x 295H plus Wing Kit
		12m3			492121.21	1400L x 1100W x 295	493121.21	2350L x 1180W x 295H plus Wing Kit
		16m3			492121.3	1400L x 1100W x 295	493121.3	2350L x 1180W x 295H plus Wing Kit
		18m3			492121.31	1400L x 1100W x 295	493121.31	2350L x 1000W x 295H plus Wing Kit
		20m3			492121.4	1400L x 1100W x 295	493121.4	2350L x 1000W x 295H plus Wing Kit
LDV	G10		491191	1480L x 730W x 295H			493191	1540L x 1180W x 290H plus Wing Kit
	V80				492192	1400L x 1100W x 295H		

Vehicle Make	Model	Type	Code	Single Side Drawer	Code	Twin Side Drawers	Code	Twin Rear Drawers
Mercedes	Sprinter	SWB			492021.1	1500L x 920W x 295H	493021.1	1600L X 1180W X 295H plus Wing Kit
		MWB			492021.2	1700L x 1100W x 295H	493021.2	2000L x 1180W x 295H plus Wing Kit
		LWB			492021.3	1700L x 1100W x 295H	493021.3	2350L x 1180W x 295H plus Wing Kit
		XLWB			492021.4	1700L x 1100W x 295H	493021.4	2350L x 1180W x 295H plus Wing Kit
	Vito	SWB			492022	1500L x 920W x 295H	493022.1	1200L x 1180W x 295H plus Wing Kit
		LWB					493022.3	1650L x 1180W x 295H plus Wing Kit
Renault	Kangoo	SWB	491081	1200L x 500W x 295H	492081	980L x 1180W x 295H		
		Maxi	491084	1200L x 500W x 295H	492084	1180L x 1180W x 295H	493084	850L x 1040W x 360H plus Wing Kit
	Master	SWB			492083.1	1400L x 900W x 295H	493083.1	1300L x 1180 x 295H plus Wing Kit
		MWB			492083.2	1600L x 1100W X 295H	493083.2	1600L x 1180W x 295H plus Wing Kit
		LWB			492083.3	1600L x 1100W X 295H	493083.3	2350L x 1180W x 295H plus Wing Kit
		ELWB			492083.4	1600L x 1100W X 295H	493083.4	2350L x 1060W x 295H plus Wing Kit
	Traffic	SWB			492082	1350L x 920W x 295H	493082.1	1230L x 1180W x 295H plus Wing Kit
		LWB			492082	1350L x 920W x 295H	493082.3	2000L x 1180W x 295H plus Wing Kit
Toyota	Hiace	LWB			492041	1330L x 1060W x 295H	493041.3	1650L x 1100W x 295H plus Wing Kit
		SLWB			492041	1330L x 1060W x 295H	493041	2200L x 1100W x 260+H plus Wing Kit
Volkswagen	Caddy	Standard	491051	1450L x 600W x 340H			493051	1050L x 1150W x 340H plus Wing Kit
		Maxi	491058	1450L x 600W x 340H			493058	1550L x 1150W x 340H plus Wing Kit
	Crafter	MWB			492055.2	1500L x 1100W x 295H	493055.2	1900L x 1180W x 295H plus Wing Kit
		LWB			492055.3	1500L x 1100W x 295H	493055.3	2350L x 1180W x 295H plus Wing Kit
	Transporter (T6)	SWB			492054	1500L x 980W x 295H	493054.1	1350L x 1180W x 295H plus Wing Kit
		LWB			492054	1500L x 980W x 295H	493054.3	1730L x 1180W x 295H plus Wing Kit

Van Drawer Units

VQuip Van drawer units are lightweight and cost competitive. Made of hardwood ply, bonded with phenol formaldehyde resin, they have very high impact resistance and are water repellent. All our van drawers are fitted with handles and compression locks. A black phenol coating with HPL fascia on your drawer units ensures your van fitout will always look great!

Our van drawers are customised to fit neatly between the wheel arches of your van. They can also be fitted with side wings to cover the space over the wheel arches to create a false floor.

Single Side Drawer

Twin Side Drawers

Twin Rear Drawers with Wings

Three Drawer Rear Unit with Wings

Custom Drawers

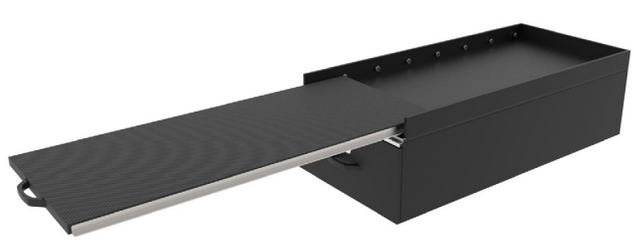

Slide Out Shelf

***Custom lengths are available subject to vehicle specification. Please contact VQuip on 1800 847 687 for a quote.**

Van Floors

Our flooring is made from the same coated hardwood ply commonly used by European Van manufacturers and local truck body builders.
Each floor is specially tailored to fit the make and model of your vehicle and may be supplied unfitted or installed by one of our network of local distributors. Please give us a call for a quotation including delivery.

Non-Slip Surface

Rubber Surface

Carpet Surface

Features:

Tough and Long Lasting
Made from 12mm hardwood ply created using a phenol formaldehyde resin and coated in a Phenolic impregnated resin film, ensuring a long-life wear resistant surface.

Pre-cut to fit
Locally measured and CNC cut. We guarantee a perfect fit to your vehicle. Pre-drilled to safely secure to the floor.

Liquid resistant
Resistant to water, diluted acids, fuel, lubricants and solvents.

Easy care
Always looks great and is easy to clean

Non-Slip Surface

Our non slip surface is hard wearing and will assist with load stability.

Rubber Surface

Professionally cut to cover the entire cargo area. May be supplied with a plywood floor to be fitted direct.

Carpet Surface

Carpet is installed with a plywood floor or fitted to false floors or drawer tops. Give us a call to check out the current options.

Mid Van
Electrician Package #1

MVSELEC1

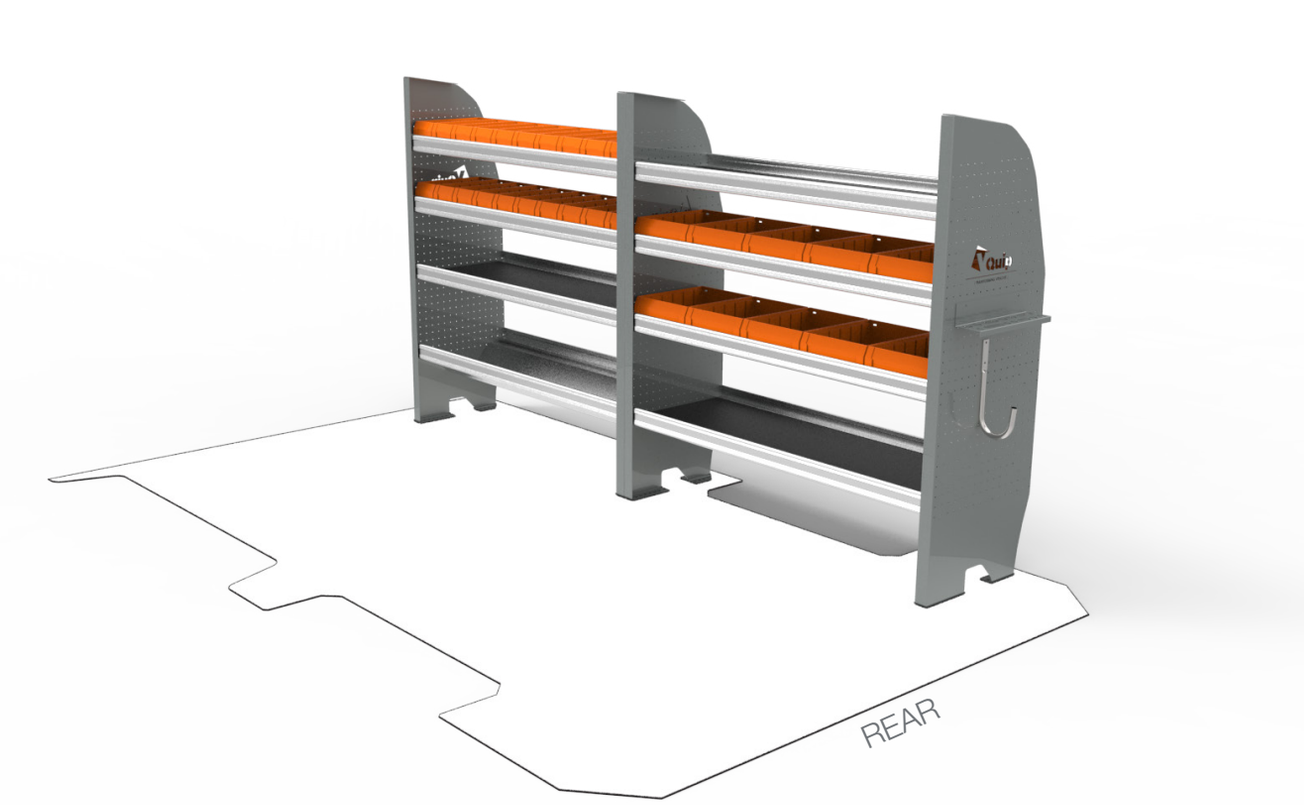

Floor not included

MVSELEC1 Package Includes:

Driver's Side Front
- Shelf Unit with Cable Tray
- Parts Bins on top 2 shelves

Driver's Side Rear
- Shelf Unit Plain
- Parts Bins on middle 2 shelves
- Lead Hook
- Tool Holder

Suits all mid size vans as below:
- Ford Transit Custom SWB
- Ford Transit Custom LWB
- Hyundai iLoad
- LDV G10
- Mercedes-Benz Vito SWB
- Mercedes-Benz Vito LWB
- Renault Trafic SWB
- Renault Trafic LWB
- Toyota Hiace LWB
- Volkswagen Transporter T6 SWB
- Volkswagen Transporter T6 LWB

Similar packages to suit all van sizes are available on request, configuration may vary.

Mid Van
Electrician Package #2

MVSELEC2

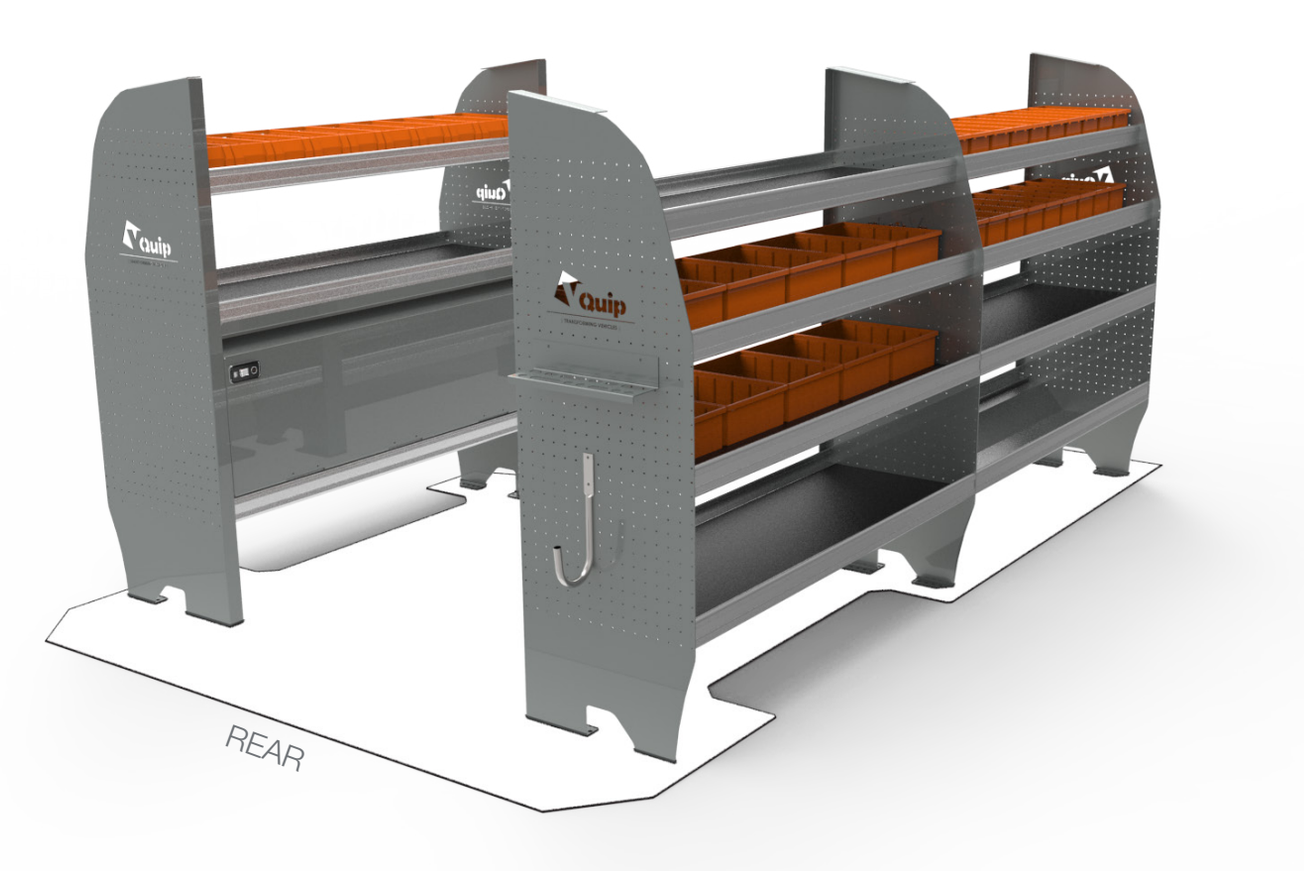

Floor not included

MVSELEC2 Package Includes:

Driver's Side Front
- Shelf Unit with Cable Tray
- Parts Bins on top 2 shelves

Driver's Side Rear
- Shelf Unit Plain
- Parts Bins on middle 2 shelves
- Lead Hook
- Tool Holder

Passenger Side Rear
- Shelf Unit with 405mm High Door
- Parts Bins on top shelf

Suits all mid size vans as below:
- Ford Transit Custom SWB
- Ford Transit Custom LWB
- Hyundai iLoad
- LDV G10
- Mercedes-Benz Vito SWB
- Mercedes-Benz Vito LWB
- Renault Trafic SWB
- Renault Trafic LWB
- Toyota Hiace LWB
- Volkswagen Transporter T6 SWB
- Volkswagen Transporter T6 LWB

Similar packages to suit all van sizes are available on request, configuration may vary.

Mid Van
Painter Package #1

MVSPAINT1

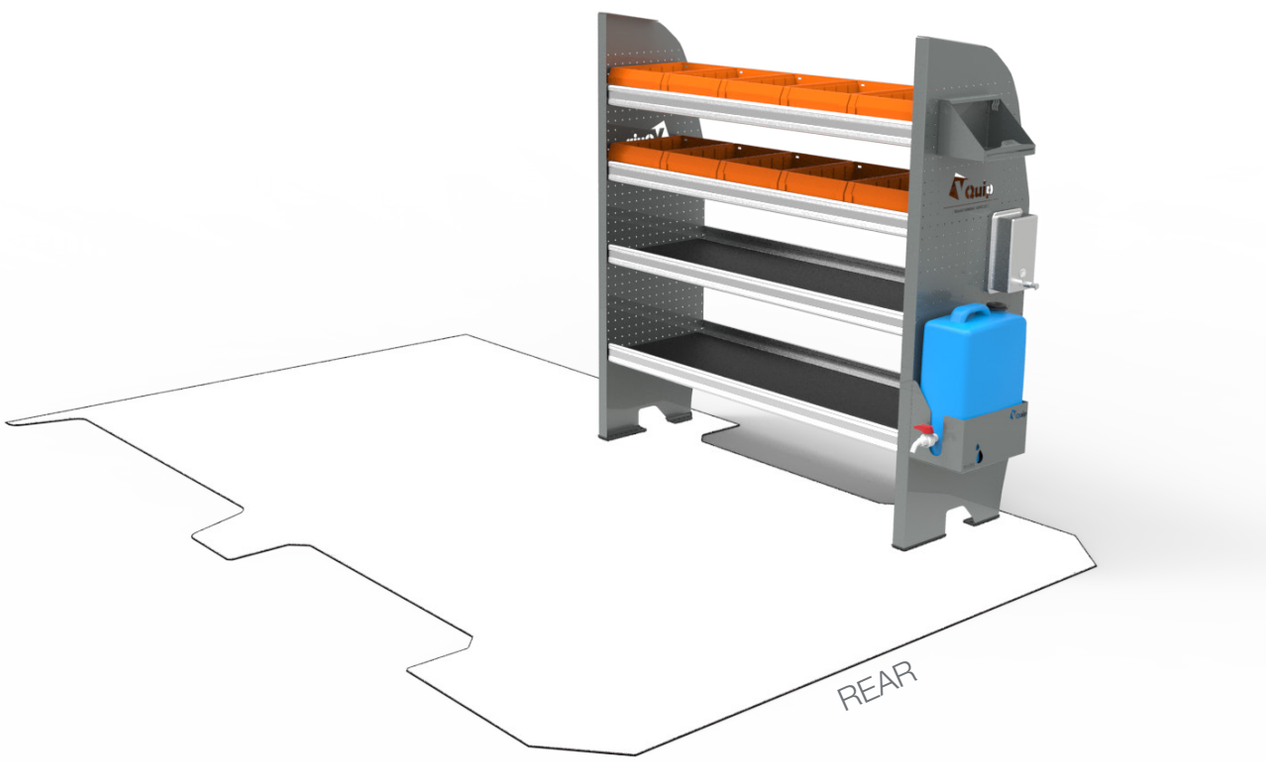

Floor not included

MVSPAINT1 Package Includes:

Driver's Side Rear
- Shelf Unit Plain
- Parts Bins on top 2 shelves
- 10L Water Bottle & Holder
- Soap Dispenser
- Paper Towel Holder

Suits all mid size vans as below:
- Ford Transit Custom SWB
- Ford Transit Custom LWB
- Hyundai iLoad
- LDV G10
- Mercedes-Benz Vito SWB
- Mercedes-Benz Vito LWB
- Renault Trafic SWB
- Renault Trafic LWB
- Toyota Hiace LWB
- Volkswagen Transporter T6 SWB
- Volkswagen Transporter T6 LWB

Similar packages to suit all van sizes are available on request, configuration may vary.

Mid Van
Painter Package #2

MVSPAINT2

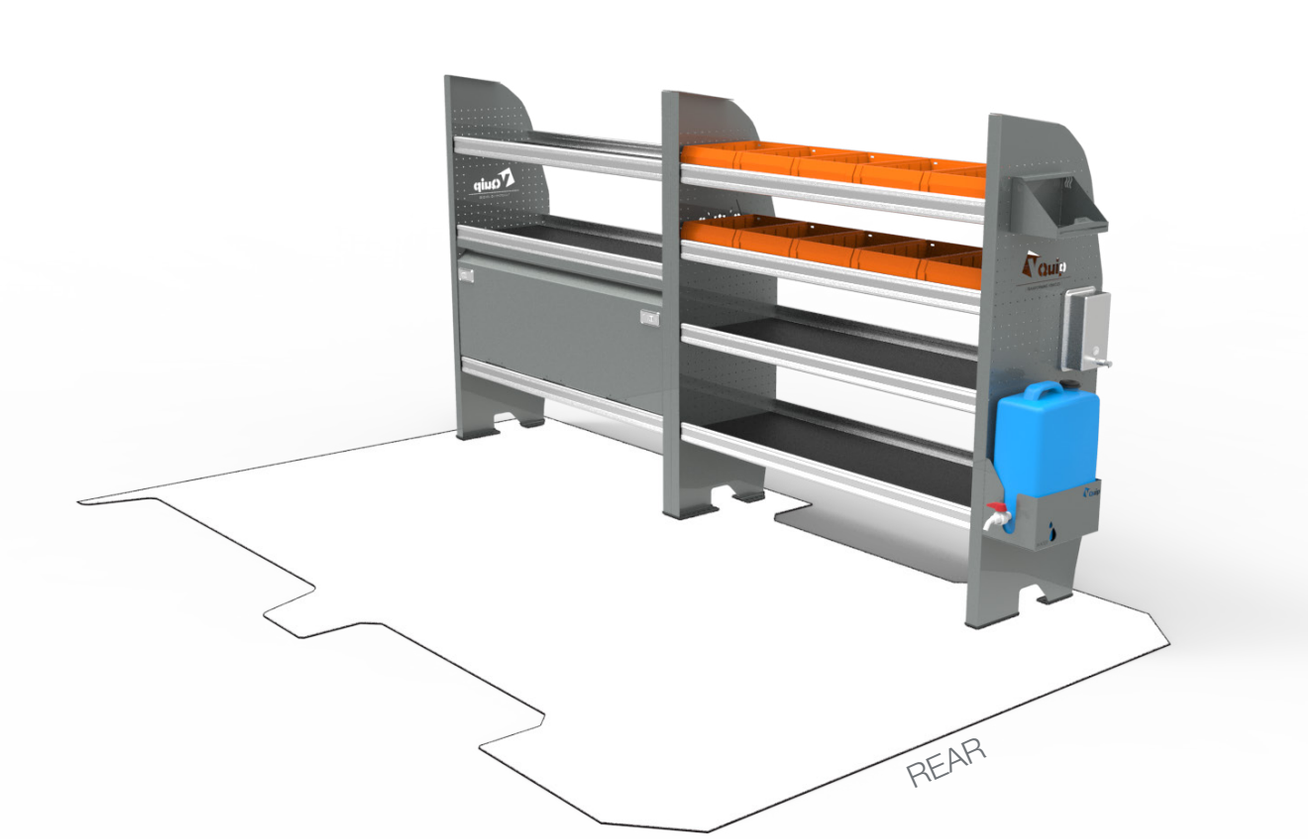

Floor not included

MVSPAINT2 Package Includes:

Driver's Side Front
- Shelf Unit with 405mm High Door

Driver's Side Rear
- Shelf Unit Plain
- Parts Bins on top 2 shelves
- 10L Water Bottle & Holder
- Soap Dispenser
- Paper Towel Holder

Suits all mid size vans as below:
- Ford Transit Custom SWB
- Ford Transit Custom LWB
- Hyundai iLoad
- LDV G10
- Mercedes-Benz Vito SWB
- Mercedes-Benz Vito LWB
- Renault Trafic SWB
- Renault Trafic LWB
- Toyota Hiace LWB
- Volkswagen Transporter T6 SWB

Similar packages to suit all van sizes are available on request, configuration may vary.

Mid Van
Plumber Package #1

MVSPLUMB1

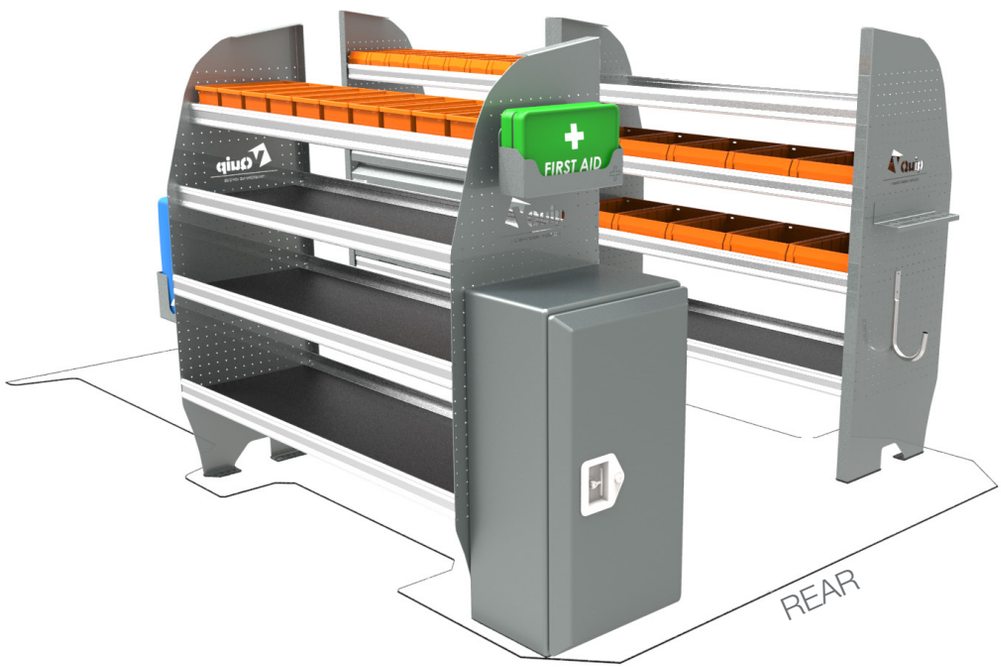

Floor not included

MVSPLUMB1 Package Includes:

Driver's Side Front
- Shelf Unit with 405mm High Door
- Parts Bins on top 2 shelves

Driver's Side Rear
- Shelf Unit Plain
- Parts Bins on middle 2 shelves
- Lead Hook
- Tool Holder

Passenger Side Rear Rear
- Shelf Unit Plain
- Parts Bins on top shelf
- 770mm Gas Bottle Box
- 10L Water Bottle & Holder
- 1.5kg Fire Extinguisher
- First Aid Kit

Suits all mid size vans as below:
- Ford Transit Custom SWB
- Ford Transit Custom LWB
- Hyundai iLoad
- LDV G10
- Mercedes-Benz Vito SWB
- Mercedes-Benz Vito LWB
- Renault Trafic SWB
- Renault Trafic LWB
- Toyota Hiace LWB
- Volkswagen Transporter T6 SWB
- Volkswagen Transporter T6 LWB

Similar packages to suit all van sizes are available on request, configuration may vary.

Mid Van
Plumber Package #2

MVSPLUMB2

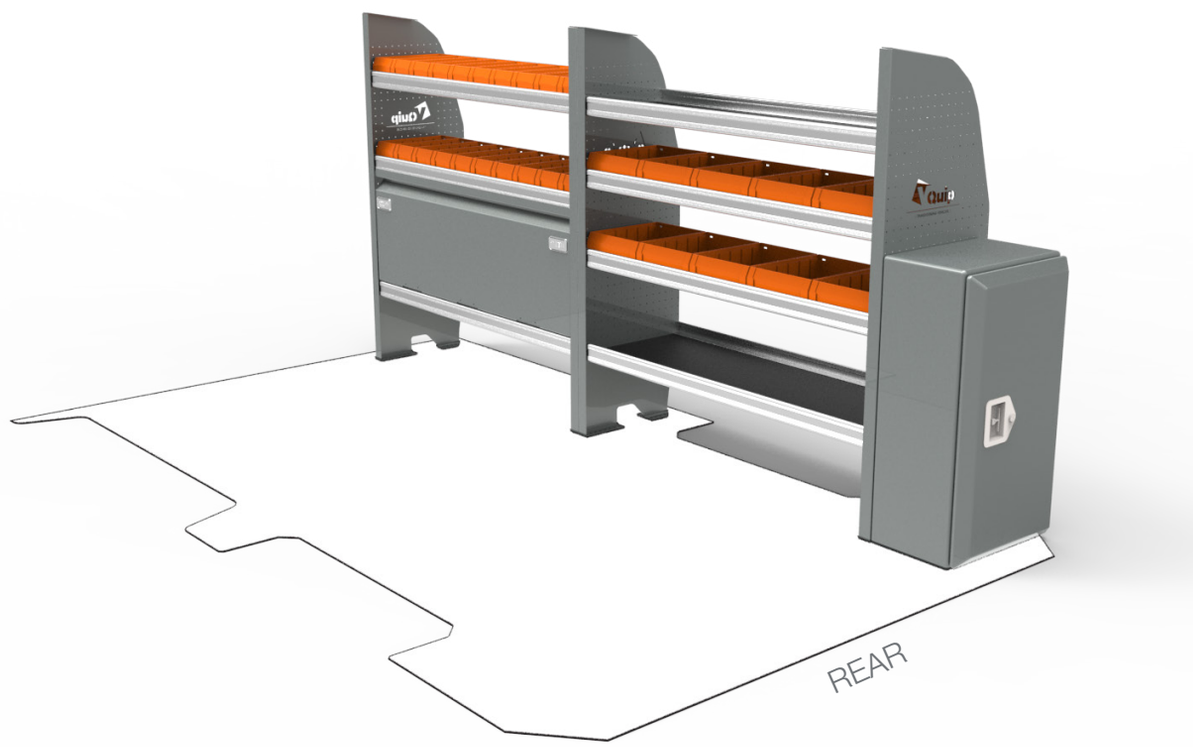

Floor not included

MVSPLUMB2 Package Includes:

Driver's Side Front
- Shelf Unit with 405mm High Door
- Parts Bins on top 2 shelves

Driver's Side Rear
- Shelf Unit Plain
- Parts Bins on middle 2 shelves
- 770mm Gas Bottle Box

Suits all mid size vans as below:
- Ford Transit Custom SWB
- Ford Transit Custom LWB
- Hyundai iLoad
- LDV G10
- Mercedes-Benz Vito SWB
- Mercedes-Benz Vito LWB
- Renault Trafic SWB
- Renault Trafic LWB
- Toyota Hiace LWB
- Volkswagen Transporter T6 SWB
- Volkswagen Transporter T6 LWB

Similar packages to suit all van sizes are available on request, configuration may vary.

Mid Van
Technician Package #1

MVSTECH1

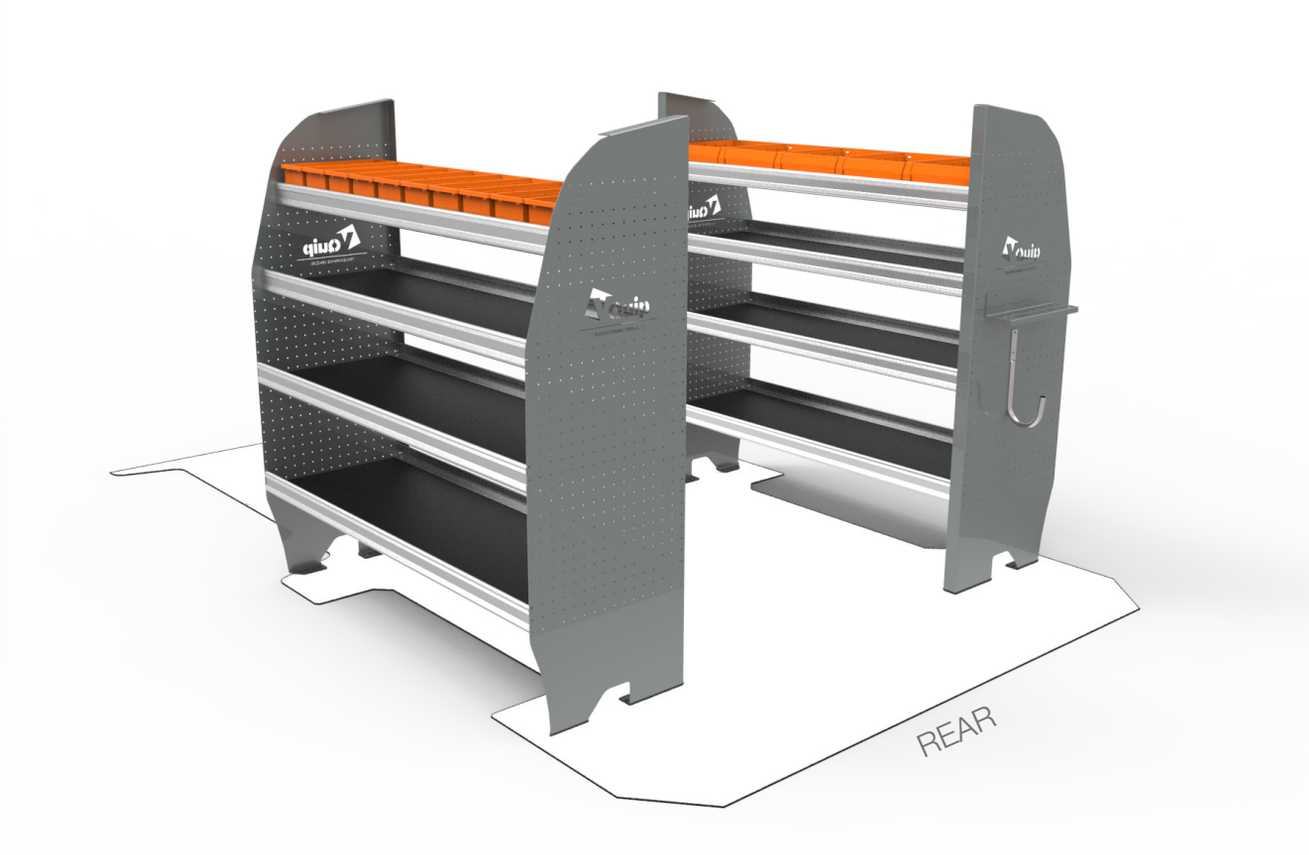

Floor not included

MVSTECH1 Package Includes:

Driver's Side Rear
- Shelf Unit Plain
- Parts Bins on top shelf
- Lead Hook
- Tool Holder

Passenger Side Rear Rear
- Shelf Unit Plain
- Parts Bins on top shelf

Suits all mid size vans as below:
- Ford Transit Custom SWB
- Ford Transit Custom LWB
- Hyundai iLoad
- LDV G10
- Mercedes-Benz Vito SWB
- Mercedes-Benz Vito LWB
- Renault Trafic SWB
- Renault Trafic LWB
- Toyota Hiace LWB
- Volkswagen Transporter T6 SWB
- Volkswagen Transporter T6 LWB

Similar packages to suit all van sizes are available on request, configuration may vary.

Mid Van
Technician Package #2

MVSTECH2

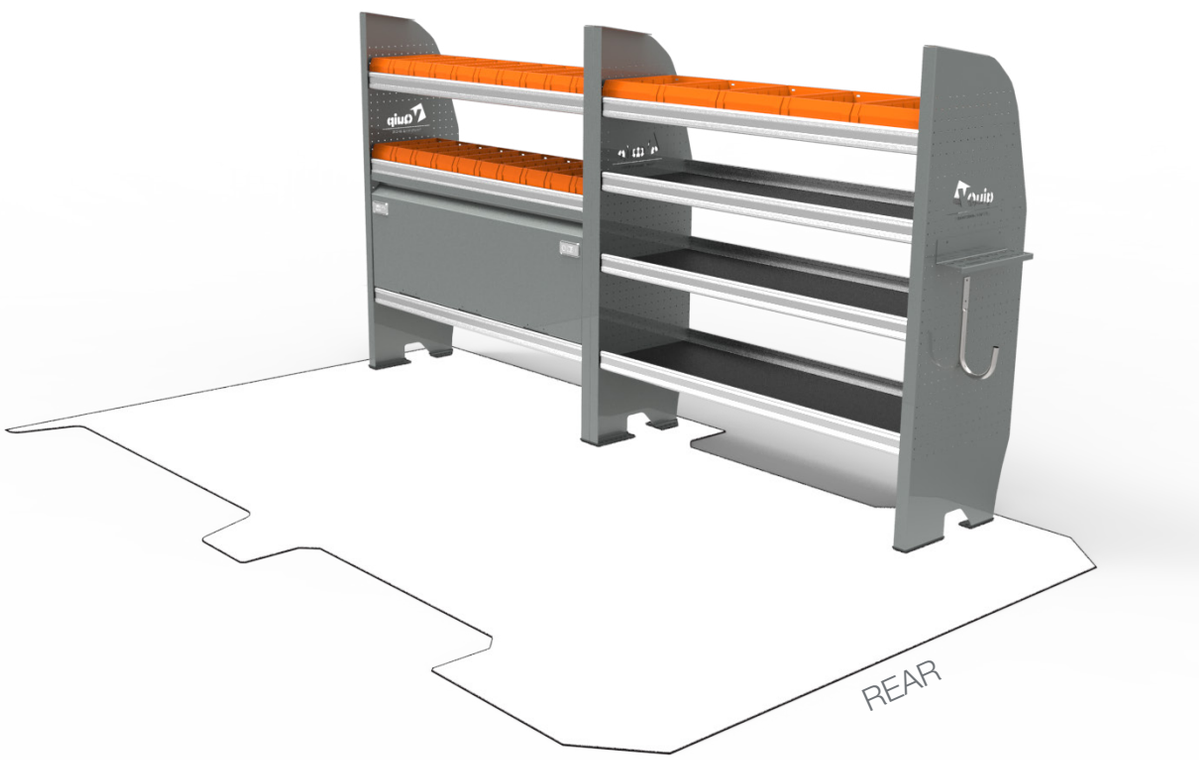

Floor not included

MVSTECH2 Package Includes:

Driver's Side Front
- Shelf Unit with 405mm High Door
- Parts Bins on top 2 shelves

Driver's Side Rear
- Shelf Unit Plain
- Parts Bins on top shelf
- Lead Hook
- Tool Holder

Suits all mid size vans as below:
- Ford Transit Custom SWB
- Ford Transit Custom LWB
- Hyundai iLoad
- LDV G10
- Mercedes-Benz Vito SWB
- Mercedes-Benz Vito LWB
- Renault Trafic SWB
- Renault Trafic LWB
- Toyota Hiace LWB
- Volkswagen Transporter T6 SWB
- Volkswagen Transporter T6 LWB

Similar packages to suit all van sizes are available on request, configuration may vary.

Improve Your Efficiency with VQuip Shelving Systems

VQuip Van Fitouts are about providing you with solutions for all types of commercial vehicles to suit your individual requirements.

We can supply you with the items you need or arrange to supply and fit your vehicle either in our facility in Scoresby or through one of our qualified installers around Australia.

Our shelving products are the key to your solution. Fully crash tested in accordance with Australian Design Rules, this hard working product comes with a range of accessories.

Complete Van Fitout
Solutions Can Include:

Internal
Cargo Barriers
Drawers
False Floors
Hot Wash Units
Interior Side Panels
Roof Lining
Sealed Partitions
Seats
Shelving
Vices
Window Security Grills
Work Benches

External
Nudge Bars
Rear Steps
Rhino Bars
Roof Racks
Safety Handles
Side Steps
Towing Hitches
Windows
Window Tinting

Electrical
Alarm Systems
Beacons
Dual Battery Systems
Electric Brakes
Electrical GPOs
LED Lighting
Parking Sensors
Power Inverters
Reversing Cameras
Work Lights

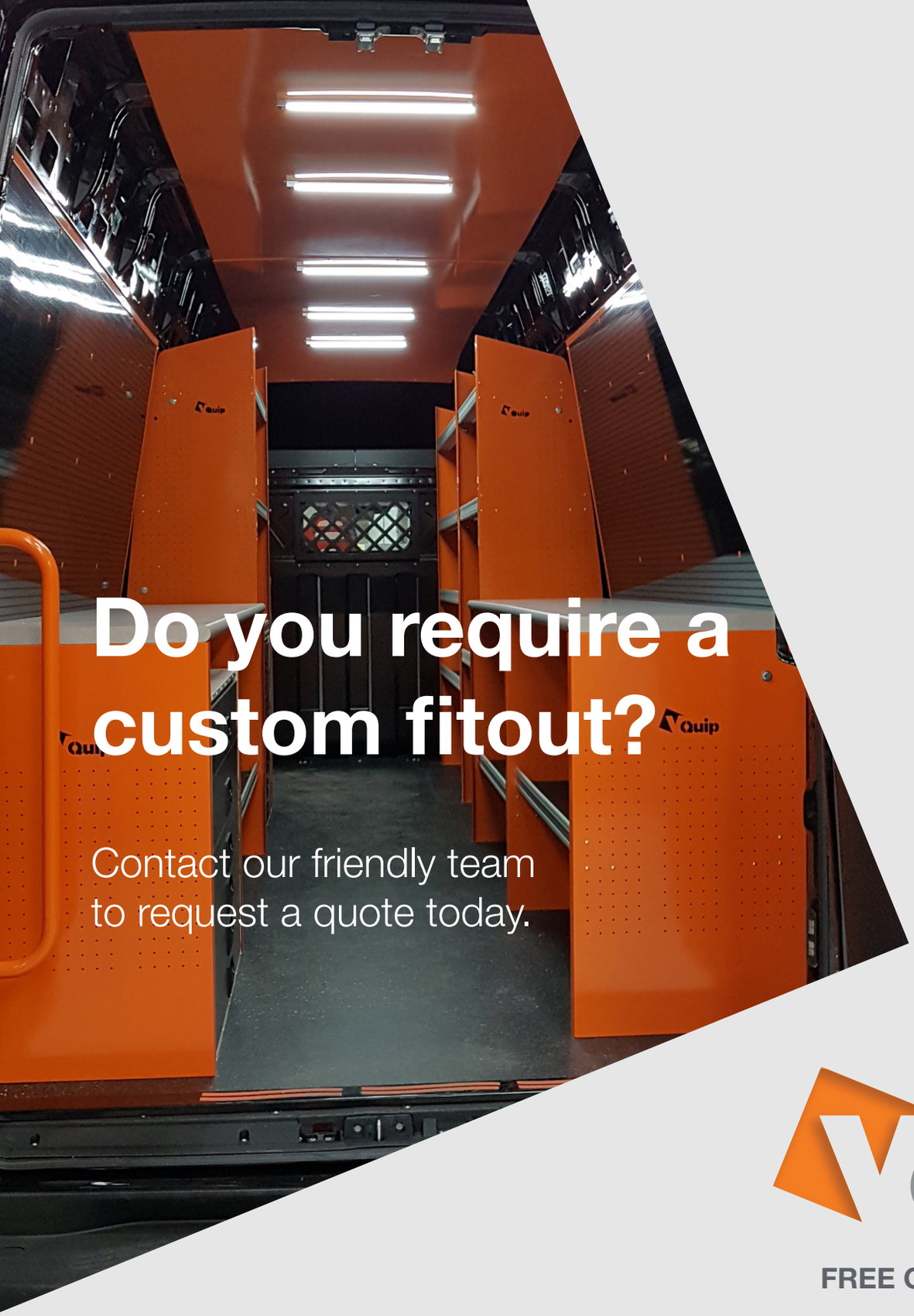

Do you require a custom fitout?

Contact our friendly team to request a quote today.

FREE CALL 1800 847 687

22 Rocco Drive
Scoresby Vic 3179
P | 03 9759 1222
F | 03 9758 4011
W | www.vquip.com.au
E | sales@vquip.com.au